LNA Matching Techniques for Optimizing Noise Figures

It is common knowledge that amplifiers add noise and distortion to the desired signal. Various techniques can be employed to minimize such unwanted effects — LNA matching is a method that costs little, yet returns a lot

By Alphonse Harter

An RF amplifier is an active network that increases the amplitude of weak signals, thereby allowing further processing by the receiver.

Receiver amplification is distributed between RF and IF stages throughout the system, and an ideal amplifier increases the desired signal amplitude without adding distortion or noise. Unfortunately, amplifiers add noise and distortion to the desired signal.

In a receiver chain, the first amplifier after the antenna contributes most to the system noise figure (assuming low loss in front of the amplifier). Adding gain in front of a noisy network reduces the noise contribution from that network.

The first part of this article is a refresher addressing the theoretical noise figure for a two-port RF network, and the optimum reflection coefficient for the minimum noise figure.

The rest deals with using scattering parameters (*S* parameters) as a design tool to match impedances for minimum noise figure. The analysis considers optimum noise matching for an SiGe low-noise amplifier.

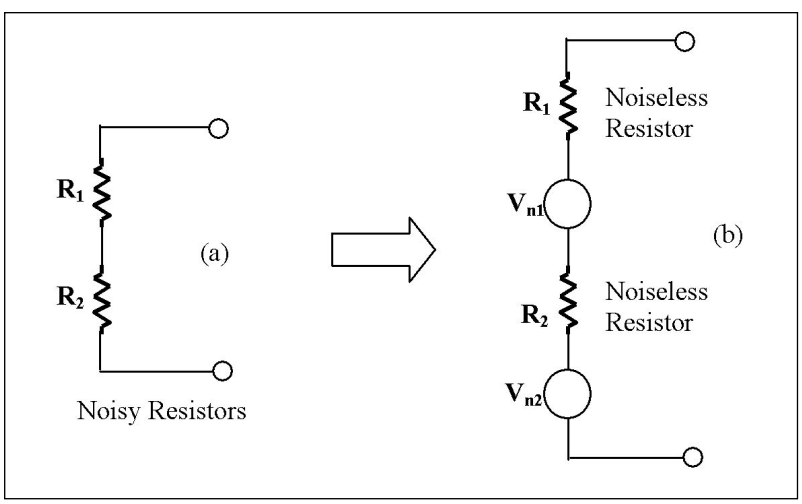

Figure 1. The total noise voltage produced by two resistors in series is modeled as shown on the right

Amplifier Noise Figure

Two methods are available for analyzing the effect of noise in electronic devices and circuits. The first method substitutes equivalent noise sources at appropriate physical locations in the small-signal model for the device. As an example, consider the noise produced by two resistors in series (figure 1a). The noise model of a resistor (figure 1b) produces an open-circuit voltage whose mean-square value is:

$$\overline{V^2_{no}} = \overline{(V_{n1} + V_{n2})^2} = \overline{V^2_{n1} + 2V_{n1}V_{n2}} + \overline{V^2_{n2}} \ldots \quad (1)$$

Because V_{n1} and V_{n2} are statistically independent (uncorrelated), the mean value of the product term in equation 1 is zero. Thus:

$$\overline{V^2_{no}} = \overline{V^2_{n1}} + \overline{V^2_{n2}} = 4kT(R_1 + R_2)b$$

When noise sources are uncorrelated, the results show that superposition can be used to calculate the total mean-square noise voltage.

The second method for analyzing the effect of circuit noise models the noisy circuit as a noiseless circuit plus external noise sources. For a noisy two-port network with internal noise sources (figure 2a), the effect of those sources can be represented by the external noise-voltage sources V_{n1} and V_{n2}, placed in series with the input and output terminals, respectively (figure 2b). Those sources must produce the same noise voltage at the circuit terminals as do the internal noise sources. The values of V_{n1} and V_{n2} are calculated as follows: Representing the noise-free two-port network in figure 2b by its *Z* parameters, we can write:

$$V_1 = Z_{11}I_1 + Z_{12}I_2 + V_{n1} \quad (2)$$

and

$$V_2 = Z_{21}I_1 + Z_{22}I_2 + V_{n2} \quad (3)$$

Equations 2 and 3 show that the Vn_1 and Vn_2 values can be determined from open-circuit measurements in the noisy two-port network. It follows from these equations that when the input and output terminals are open ($I_1 = I_2 = 0$),

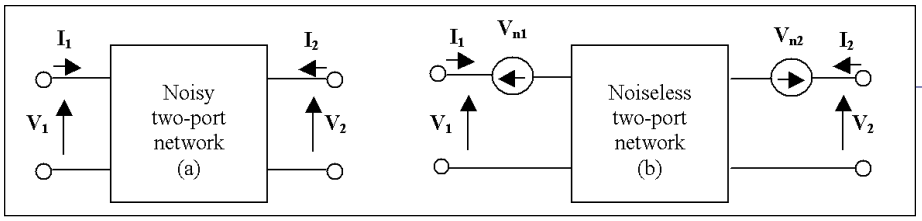

Figure 2. A noisy two-port network (a) can be modeled by a noise-free two-port network (b) with external noise-voltage sources V_{n1} and V_{n2}

$$V_{n1} = V_1 \mid I_1 = I_2 = 0$$

and

$$V_{n2} = V_2 \mid I_1 = I_2 = 0$$

In other words, V_{n1} and V_{n2} equal the corresponding open-circuit voltages.

In an alternate representation of the noisy two-port network (figure 3), the external sources are the current-noise sources I_{n1} and I_{n2}. Representing the noise-free two-port network, we can write:

$$I_1 = Y_{11}I_1 + Y_{12}I_2 + I_{n1}$$

and

$$I_2 = Y_{21}I_1 + Y_{22}I_2 + I_{n2}$$

The values of I_{n1} and I_{n2} in figure 3 follow from short-circuit measurements taken in the noisy two-port network. That is:

$$y_s = \frac{1-\Gamma_s}{1+\Gamma_s} \leftrightarrow \Gamma_1 \frac{1-y_s}{1+y_s}$$

and

$$y_{opt} = \frac{1-\Gamma_{opt}}{1+\Gamma_{opt}} \leftrightarrow \Gamma_1 \frac{1-y_{opt}}{1+y_{opt}}$$

Besides that of figures 2b and 3, other representations can be derived for a noisy two-port. A representation convenient for noise analysis places the noise source at the input of the network (figure 4). Representing the noise-free two-port network in figure 4 by its ABCD parameters, it can be written:

$$V_1 = AV_2 + B(-I_2) + V_n$$

and

$$I_1 = CV_2 + D(-I_2) + I_n$$

The previous equations show there is no simple way to evaluate V_n and I_n in figure 4 using open- and short-circuit measurements. From a practical point of view, those values (V_n and I_n) can be expressed in terms of the noise voltages V_{n1} and V_{n2} in figure 2b (which require only open-circuit measurements). The relationship between noise sources V_n and I_n in figure 4 and noise sources V_{n1} and V_{n2} in

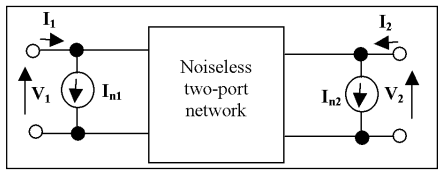

Figure 3. A noisy two-port network can also be represented by a noise-free two-port with external noise-current sources I_{n1} and I_{n2}

figure 2b is derived from the following.

Using Z parameters to represent the noise-free two-port network in figure 4, it can be written:

$$\begin{aligned} V_1 &= Z_{11}(I_1 - I_n) + Z_{12}I_2 + Vn \\ &= Z_{11}I_1 + Z_{12}I_2 + (V_n - Z_{11}I_n) \end{aligned} \quad (4)$$

and

$$\begin{aligned} V_2 &= Z_{21}(I_1 - I_n) + Z_{22}I_2 \\ &= Z_{21}I_1 + Z_{22}I_2 - Z_{21}I_n \end{aligned} \quad (5)$$

Comparing (2) and (3) with (4) and (5), it follows that:

$$V_{n1} = V_n - Z_{11}I_n \quad (6)$$

$$V_{n2} = V_{n2} - Z_{21}I_n \quad (7)$$

Hence, solving (6) and (7) for V_n and I_n gives:

$$V_n = V_{n1} - \left(\frac{Z_{11}}{Z_{21}}\right)V_{n2}$$

and

$$In = -\left(\frac{V_{n2}}{Z_{21}}\right)$$

An alternate method for determining V_n and I_n relates them to the noise sources I_{n1} and I_{n2} in figure 3. In this case the relationships are:

$$V_n = -\left(\frac{I_{n2}}{Y_{21}}\right) \quad (8)$$

and

$$I_n = I_{n1} - \left(\frac{Y_{11}}{Y_{21}}\right)I_{n2} \quad (9)$$

A source connected to the noisy two-port network (see figure 5) is represented by a current source with admittance Y_s. It is assumed that noise from the source is uncorrelated with noise from the two-port network. Thus, noise power is proportional to the mean square of the short-circuit current (denoted by I^2_{SC}) at the input port of the noise-free amplifier, and noise power due to the source alone is proportional to the mean square of the source current (I^2_S). Hence, the noise figure F is given by:

$$F = \frac{\overline{I^2_{SC}}}{\overline{I^2_S}} \quad (10)$$

Because $I_{sc} = -I_s + I_n + V_nY_s$, it follows that the mean square of I_{sc} is given by:

$$\begin{aligned} \overline{I^2_{SC}} &= \overline{(-I_s + I_n + V_nY_s)^2} \\ &= \overline{I^2_S} + \overline{(I_n + V_nY_s)^2} - \overline{2I_s(I_n + V_nY_s)} \end{aligned} \quad (11)$$

And, because noise from the source and noise from the two-port network are uncorrelated, we have:

$$\overline{I^2_S(I_n + V_nY_s)} = 0$$

Eq $$\overline{I^2_{SC}} = \overline{I^2_S} + \overline{(I_n + V_nY_s)}^2 \quad (12)$$

Substituting (12) into (10) gives:

$$F = 1 + \frac{\overline{(I_n + V_nY_s)}^2}{\overline{I^2_S}} \quad (13)$$

There is some correlation between the external sources V_n and I_n. Hence, I_n can be written as the sum of two terms, one uncorrelated to V_n (I_{un}) and one correlated to V_n (I_{nc}). Thus:

$$I_n = I_{nu} + I_{nc} \quad (14)$$

Furthermore, defining the relation between I_{nc} and V_n in terms of a correlation admittance, Y_c, gives:

$$I_{nc} = Y_cV_c \quad (15)$$

However, Y_C is not an actual admittance in the circuit. It is defined by (15) and calculated as follows:

From (14):

$$I_n = I_{nu} + Y_cV_c \quad (16)$$

Multiplying (16) by V^*_n, taking the

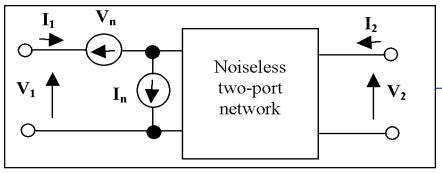

Figure 4. A noisy two-port network can be represented as a noise-free two-port with external noise sources V_n and I_n at the input

mean, and observing that:

$\overline{I_{nu}V_n^*} = 0$, we obtain:

$\overline{I_nV_n^*} = Y_c\overline{V^2_n}$, or $Yc = \dfrac{V^*_n I_n}{V^2_n}$

Substituting (16) into (13) produces the following expression for F:

$$F = 1 + \frac{\overline{(I_{nu} + (Y_c + Y_s)V_n)^2}}{I^2_s} \tag{17}$$

Noise produced by the source is related to the source conductance by:

$$\overline{I^2_s} = 4kT_0G_sB \tag{18}$$

where $G_s = R_e[Y_s]$. The noise voltage can be expressed in terms of an equivalent noise resistance R_n as:

$$\overline{V^2_n} = 4kT_0R_nB \tag{19}$$

The uncorrelated noise current can be expressed in terms of an equivalent noise conductance, G_u, namely:

$$\overline{I^2_n} = 4kT_0G_uB \tag{20}$$

Substituting (18), (19), and (20) into (17), and letting $Y_c = G_c + jB_c$ and $Y_s = G_s + jB_s$ gives:

$$F_1 = \frac{4kT_0G_uB + |G_s + jB_s + G_c + jB_c|^2\, 4kT_0R_nB}{4kT_0G_sB} = 1 + \frac{G_u}{G_s} + \frac{R_n}{G_s}\left[(G_s + G_c)^2 + (B_s + B_c)^2\right] \tag{21}$$

The noise factor can be minimized by properly selecting Y_S. From (21), F is decreased by selecting $B_S = -B_C$. (22)

Hence, from (21):

$$F_{BS} = -B_c = 1 + \frac{G_u}{G_s} + \frac{R_n}{G_s}(G_s + G_c)^2 \tag{23}$$

The dependence of the expression in (23) on G_s can be minimized by setting:

$$\frac{F_{BS} = -B_c}{dG_s} = 0$$

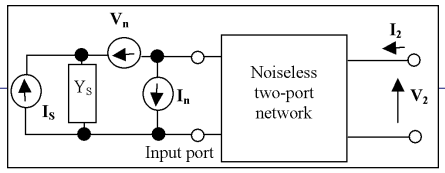

Figure 5. This noise model lets you calculate the amplifier noise figure

Which gives:

$$\frac{F_{BS} = -B_C}{dGs} = -\frac{G_u}{G^2_S} + R_n\frac{(2G_S(G_S + G_C) - (G_S + G_C)^2)}{G^2_S} = 0$$

Solving for G_S, we obtain:

$$G_s = \sqrt{G^2_c + \frac{G_u}{R_n}} \tag{24}$$

The values of G_S and B_S in (24) and (22) give the source admittance, which results in the minimum (optimum) noise figure. This optimum value of the source admittance is commonly denoted by $Y_{opt} = G_{opt} + jB_{opt}$. This is given as:

$$Y_{opt} = G_{opt} + B_{opt} = \sqrt{G^2_C + \frac{G_u}{R_n}} - jB_c \tag{25}$$

From (23), The minimum noise figure, F_{min}, is:

$$F_{min} = F \mid Y_s = 1 + \frac{G_u}{G_{opt}} + \frac{Rn}{G_{opt}}(G_{opt} + G_c)^2 \tag{26}$$

Solving (24) for G_{U}/G_{opt} and substi-

$$F_{min} = 1 + R_n\left(G_{opt} - \frac{G^2_C}{G_{opt}}\right)\frac{G_u}{G_{opt}} + \frac{R_n}{G_{opt}}(G^2_{opt} + 2G_{opt}G_c + G^2_c) = 1 + 2R_n(G_{opt} + G_c) \tag{27}$$

Using (27), we can write (21) as:

$$F = F_{min} - 2R_n(G_{opt} + G_c) + \frac{G_u}{G_s} + \frac{R_n}{G_s}\left[(G_s + G_c)^2 + (B_s - B_{opt})^2\right] \tag{28}$$

Solving Equation 24 for G_U and substituting into (28), the expression for F can be simplified to:

$$F = F_{min} + \frac{R_n}{G_s}\left[(G_s - G_{opt})^2 + (B_s - B_{opt})^2\right] \tag{29}$$

Equation 29 shows that F depends on $Y_{opt} = G_{opt} + jB_{opt}$, and on F_{min}. When these quantities are specified, the value of F can be determined for any source admittance, Y_s. This equation can also be expressed as:

$$F = F_{min} + \frac{r_n}{g_s}|y_s - y_{opt}|^2 = F_{min} + \frac{r_n}{\text{Real}(y_s)}|y_s - y_{opt}|^2 \tag{30}$$

where $r_n = R_n/Z_0$ is the normalized noise resistance. And $y_s = Y_SZ_0$ is the normalized source admittance. Hence:

$$Y_s = \frac{Y_s}{Y_0} = \frac{G_s + jB_s}{Y_o} = g_s + jb_s$$

and y_{opt} is the normalized value of the optimum source admittance:

$$Y_{opt} = \frac{Y_{opt}}{Y_0} = \frac{G_{opt} + jB_{opt}}{Y_0} = g_{opt} + jb_{opt}$$

Admittances y_S and y_{opt} can be expressed in terms of reflection coefficients:

$$y_s = \frac{1 - \Gamma_s}{1 + \Gamma_s} \leftrightarrow \Gamma_1\frac{1 - y_s}{1 + y_s}$$

and

$$y_{opt} = \frac{1 - \Gamma_{opt}}{1 + \Gamma_{opt}} \leftrightarrow \Gamma_1\frac{1 - y_{opt}}{1 + y_{opt}}$$

Expressing y_S and y_{opt} in terms of reflection coefficients help formulate the noise figure (NF) of (30) as a function of those coefficients. This formulation is more convenient for industrial LNA applications, because in most data sheets the LNA characteristics are expressed as a table of S parameters and the optimum reflection coefficient Γ_{opt} versus frequency, as:

$$F = F_{min} + 4r_n\frac{|\Gamma_s - \Gamma_{opt}|^2}{|1 + \Gamma_{opt}|^2(1 - |\Gamma_s|^2)} \tag{31}$$

When the noise figure {F in (31)} is expressed as a function of a circle, it can be used with a Smith chart for optimum noise-figure matching in specific applications as show in the following set of equations.

$$\frac{F - F_{min}}{4r_n} = \frac{|\Gamma_s - \Gamma_{opt}|^2}{|1+\Gamma_{opt}|^2 (1-|\Gamma_s|^2)};$$

$$\frac{F - F_{min}}{4r_n}|1+\Gamma_{opt}|^2 = \frac{|\Gamma_s - \Gamma_{opt}|^2}{(1-|\Gamma_s|^2)}$$

$$N = \frac{|\Gamma_s - \Gamma_{opt}|^2}{(1-|\Gamma_s|^2)} \text{ with}$$

$$N = \frac{F - F_{min}}{4r_n}|1+\Gamma_{opt}|^2 \quad ;$$

$$N = \frac{|\Gamma_s|^2 - 2\Gamma_s\Gamma_{opt} + |\Gamma_{opt}|^2}{(1-|G_s|^2)}$$

and

$$N(1-|\Gamma_s|^2) = |\Gamma_s|^2 - 2\Gamma_s\Gamma_{opt} + |\Gamma_{opt}|^2 \quad ;$$

$$(1+N)|\Gamma_s|^2 = N + 2\Gamma_s\Gamma_{opt} - |\Gamma_{opt}|^2$$

and

$$|\Gamma_s|^2 = \frac{N}{(1+N)} + \frac{2\Gamma_s\Gamma_{opt}}{(1+N)} - \frac{|\Gamma_{opt}|^2}{1+N} \quad ;$$

$$|\Gamma_s|^2 - \frac{2\Gamma_s\Gamma_{opt}}{(1+N)} + \frac{|\Gamma_{opt}|^2}{(1+N)^2} - \frac{|\Gamma_{opt}|^2}{(1+N)^2}$$
$$= \frac{N}{(1+N)} - \frac{|\Gamma_{opt}|^2}{(1+N)} \quad ;$$

$$\left|\Gamma_s - \frac{\Gamma_{opt}}{(1+N)}\right|^2 = \frac{N}{(1+N)}$$
$$- \frac{|\Gamma_{opt}|^2}{(1+N)} + \frac{|\Gamma_{opt}|^2}{(1+N)^2} \quad ;$$

$$\left|\Gamma_s - \frac{\Gamma_{opt}}{(1+N)}\right|^2$$
$$= \frac{N}{(1+N)^2}\left[N^2 + N(1-|\Gamma_{opt}|^2)\right] \quad .$$

For LNA input matching, a noise circle is positioned on the Smith chart's center and radius.

Center:

$$O_N = \frac{\Gamma_{opt}}{(1+N)}, \text{ with}$$

$$N = \frac{F - F_{min}}{4r_n}|1+\Gamma_{opt}|^2$$

Radius:

$$R_N = \frac{1}{(1+N)}\sqrt{N^2 + N(1-|\Gamma_{opt}|^2)}$$

Designing for Optimum Noise Figure

For any two-port network, the noise figure gives a measure of the amount of noise added to a signal transmitted through the network. For any practical circuit, the signal-to-noise ratio at its output will be worse (smaller) than at its input. In most circuit designs, however, you can minimize the noise contribution of each two-port network through a judicious choice of operating point and source resistance.

The preceding section demonstrates that for each LNA (indeed, for any two-port network) there exists an optimum noise figure. LNA manufacturers often specify an optimum source resistance on the data sheet.

To design an amplifier for minimum noise figure, determine (experimentally or from the data sheet) the source resistance and bias point that produce the minimum noise figure for that device. Next, force the actual source impedance to "look like" that optimum value. All stability considerations still apply, of course. If the calculated Rollet stability factor (K) is less than 1 (K is defined in the literature as a figure of merit for LNA stability), then the source and load-reflection coefficients must be carefully chosen. For an accurate graphical depiction of the unstable regions, it is best in that case to draw stability circles.

After providing the LNA with optimum source impedance, the next step is to determine the optimum load-reflection coefficient (ΓL) needed to properly terminate the LNA's output:

$$\Gamma_L = \left[S_{22}\frac{S_{21}\Gamma_S S_{12}}{1 - S_{11}\Gamma_S}\right]^*$$

where Γ_S is the source-reflection coefficient necessary for minimum noise figure. (The asterisk in the above equation indicates the conjugate of the complex quantity Γ_L.)

Applications

For practical examples to support the theory of optimum noise matching for LNAs, we examine an LNA (figure 6) with high third-order adjustable intercept point (IP3). This particular design is for personal communications system (PCS) phone applications with gain selected by logic control (14.5 dB in high-gain mode and 0.8 dB in low-gain mode), the amplifier exhibits an optimum noise figure of 1.9 dB (depending on the value of bias resistor, R_{bias}).

The figure 6 application employs an LNA operating at a PCS receiver frequency of 1960 MHz and noise figure of 2 dB. It must operate between 50Ω terminations. For this particular device, the optimum R_{bias} for minimum noise figure is 715Ω. The optimum source-reflection coefficient Γ_{OPT} for minimum noise figure in a 1960 MHz application

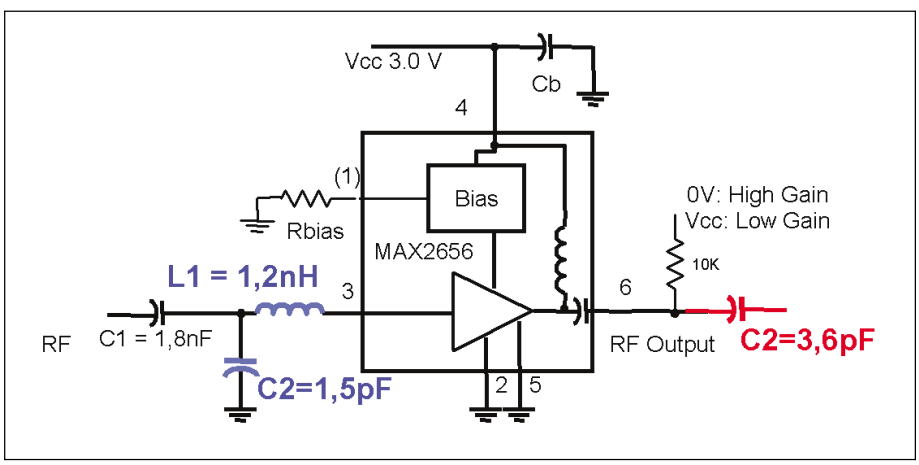

Figure 6. Typical operating circuit for the referenced LNA

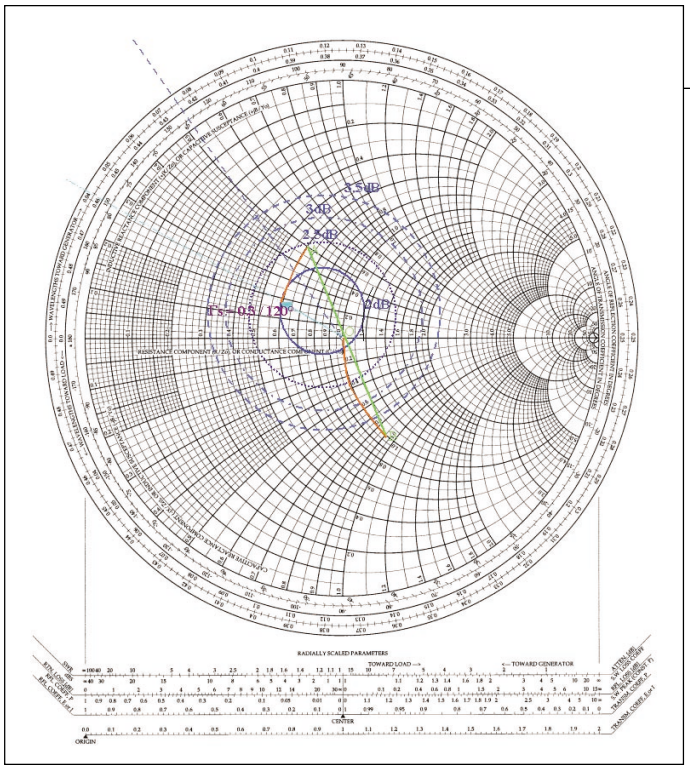

Figure 7. The solid circle on this Smith chart depicts the desired (optimum) 2dB noise figure for the PCS LNA with input matching

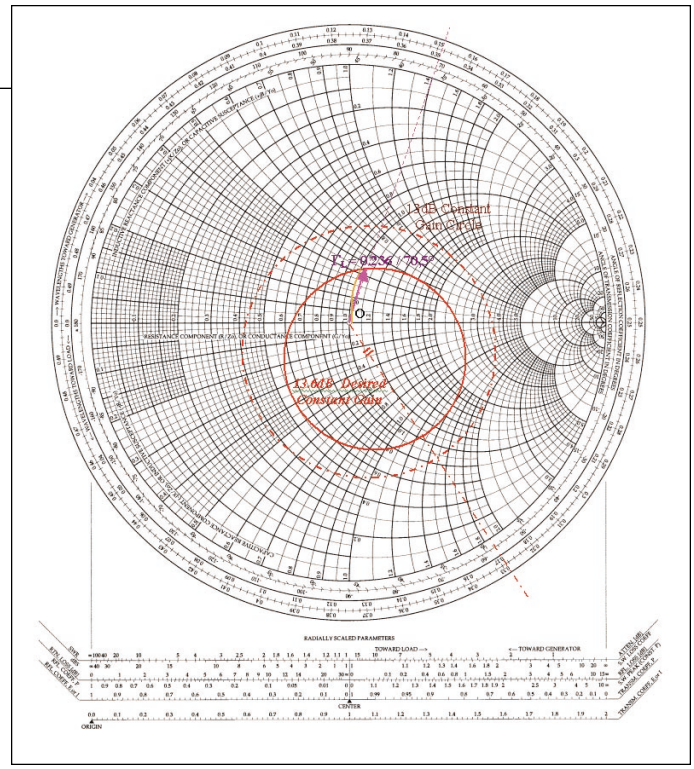

Figure 8. The LNA with output matching for a desired (optimum) 2dB noise figure

(F_{MIN} = 1.79 dB) is:

$$\Gamma_{opt} = 0.130 / 124.48^\circ$$

A source impedance with noise-equivalent resistance R_N = 43.2336Ω yields the minimum noise figure.

This particular LNA operating at 1960 MHz has the following S parameters (expressed as magnitude/angle):

S_{11} = 0.588/–118.67°
S_{21} = 4.12/149.05°
S_{12} = 0.03/–167.86°
S_{22} = 0.275/–66.353°

The calculated stability factor (K = 2.684) indicates unconditional stability, so we can proceed with the design. Figure 6 (a typical operating circuit) shows design values for the input matching network. First, a Smith chart for input matching shows (in blue) the 2 dB constant-noise circle requested by design (figure 7). For comparison, note the dotted-line depiction of constant-noise circles corresponding to noise figures of 2.5 dB, 3 dB, and 3.5 dB.

For convenience, we choose a source-reflection coefficient of Γ_S = 0.3/150° on the 2 dB constant-noise circle. The normalized 50Ω source resistance is transformed to Γ_S using three components: The arc Γ_{SA} (clockwise in the impedance chart) gives the value of series inductance L_1. Arc B_O (clockwise in the admittance chart) gives the value of shunt capacitor C_1.

The value of arc Γ_{SA} measured on the plot is 0.3 units, so Z = 50(0.3) = 15Ω. Thus, $L_1 = 15/\omega = 15/(2\pi f) = 15/(2\pi)(1.96 \times 10^9)$ = 1.218 nH, rounded to 1.2 nH. Value of the arc B_O measured on the plot is 0.9 units, so 1/Y = Z = 50/0.9 = 55.55Ω. Thus, $C_2 = 1/(55.55(\omega)) = 1/(55.55(2pf)) = 1/(55.55)(2\pi)(1.96 \times 10^9)$ = 1.46 pF, rounded to 1.5 pF.

Capacitor C_1 is just a high-valued DC isolation capacitor, and does not interfere with the input matching. The chosen Γ_S provides the load-reflection coefficient needed to properly terminate the LNA:

$$\Gamma_L = \left[S_{22} \frac{S_{21}\Gamma_S S_{12}}{1 - S_{11}\Gamma_S} \right]^* = 0.236 / 70.5^\circ$$

This value and the normalized load-resistance value are plotted in Figure 8, which also shows a possible method for transforming the 50Ω load into Γ_L. For this example, note that a single series capacitor provides the necessary impedance transformation.

The arc $O\Gamma_L$ (counterclockwise in the impedance chart) gives the value for series capacitor C_3. The value of arc $O\Gamma_L$ measured on the plot is 0.45 units, so Z = 50(0.45) = 22.5Ω. Thus, $C_3 = 1/(22.5(\omega)) = 1/(22.5)(2\pi f)) = 1/(22.5)(2\pi)(1.96 \times 10^9)$ = 3.608 pF, rounded to 3.6pF.

RF

References

1. Guillermo Gonzalez, *Microwave Transistor Amplifiers, Analysis & Design*, 2nd ed. (Upper Saddle River, New Jersey: Prentice Hall, 1996) .

2. Christopher Bowick, *RF Circuit Design*, (Newnes, 1997).

About the author

Alphonse Harter is the corporate field application engineer for Maxim Integrated Products Inc. (**www.maxim-ic.com**) in the France office. He covers the southern Europe region for the wireless products group. He may be reached at **alphonse_harter@maximhq.com**.